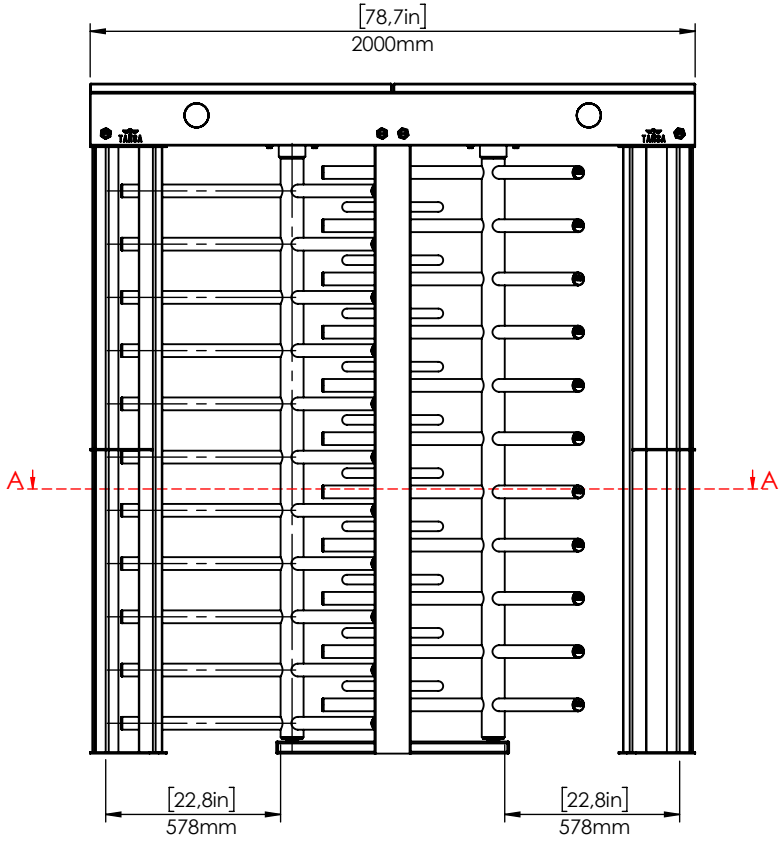
[78,7in]
2000mm
A
A
[22,8in]
578mm
[22,8in]
578mm

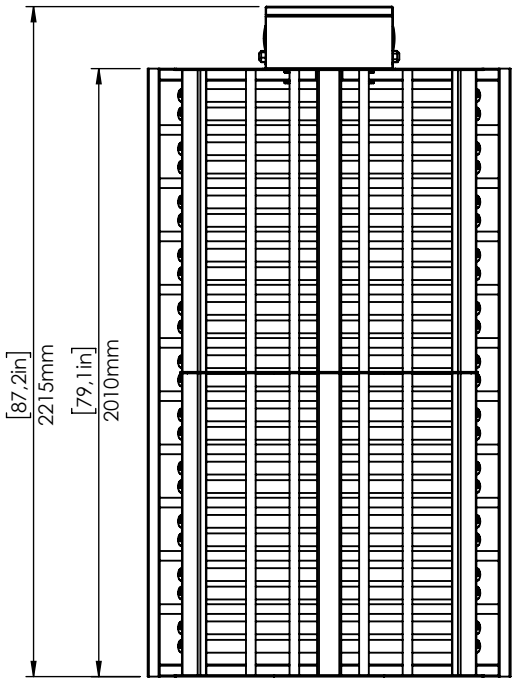
[87,2in]
2215mm
[79,1in]
2010mm

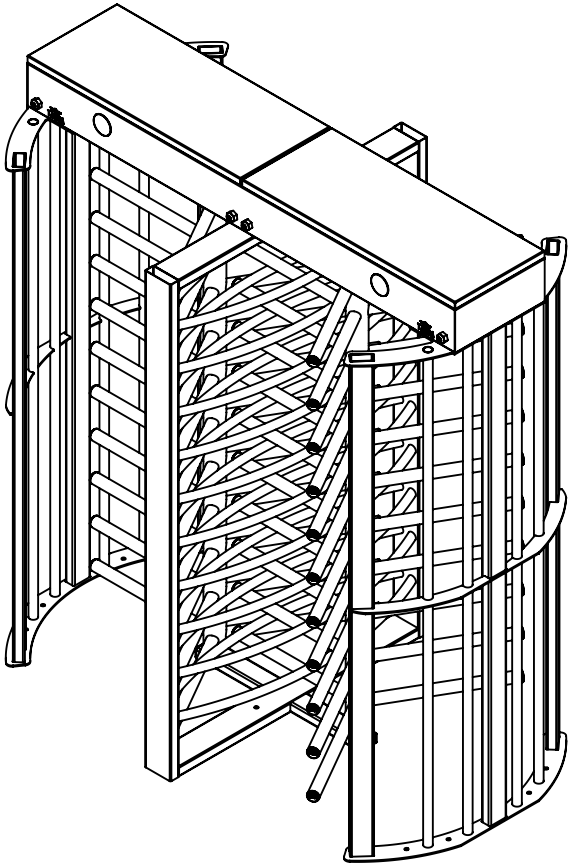

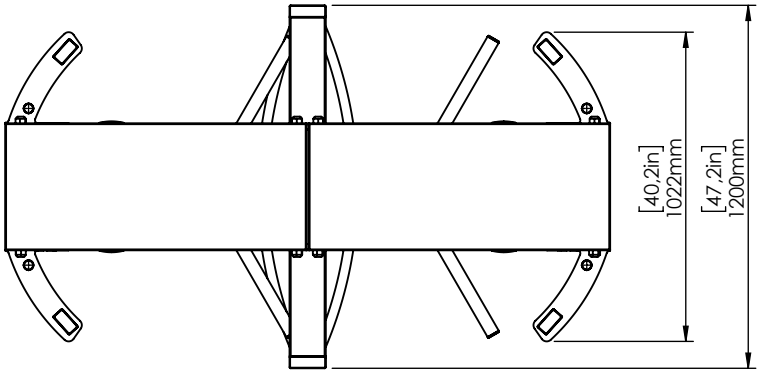
[40,2in]
1022mm
[47,2in]
1200mm

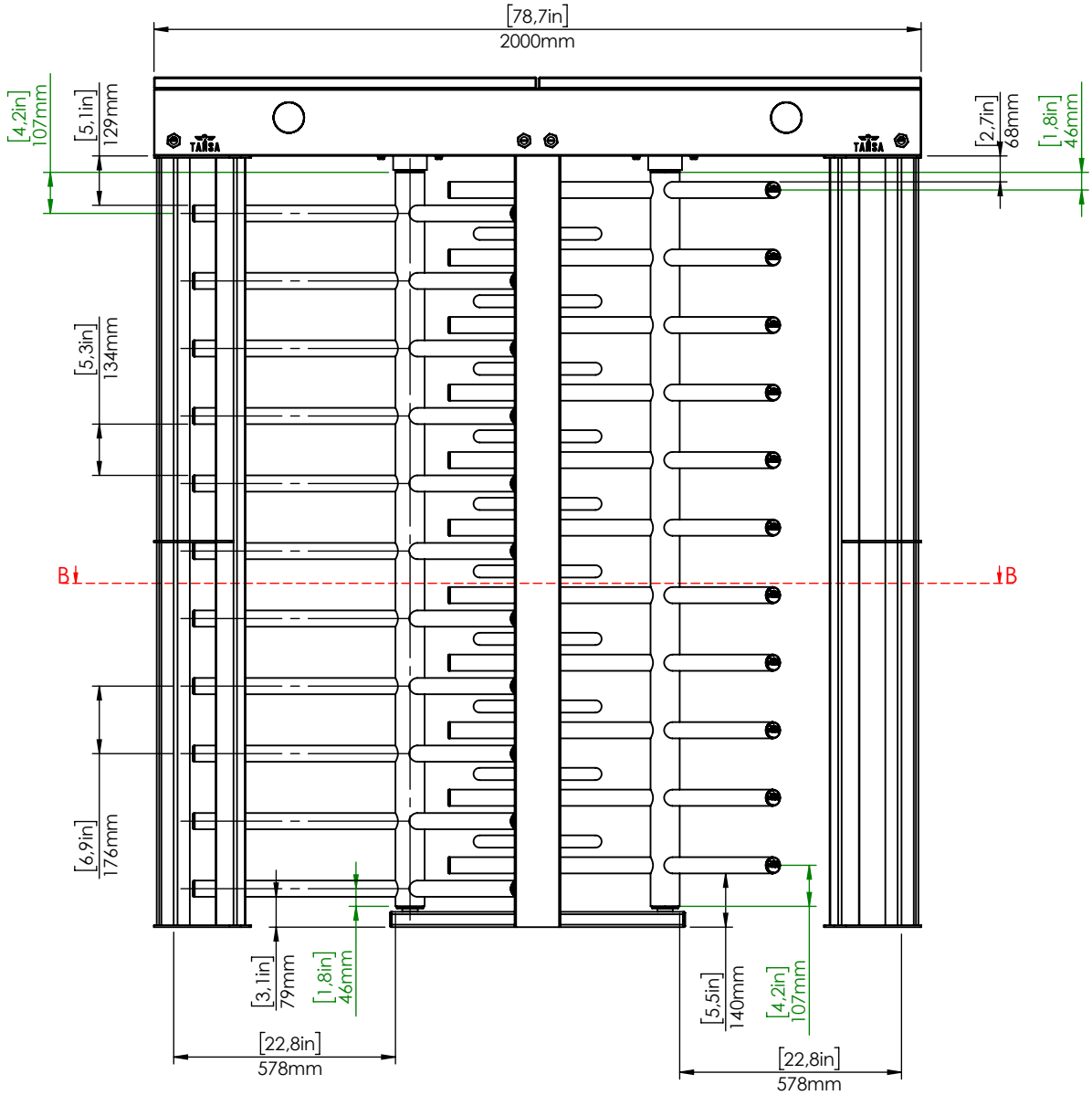

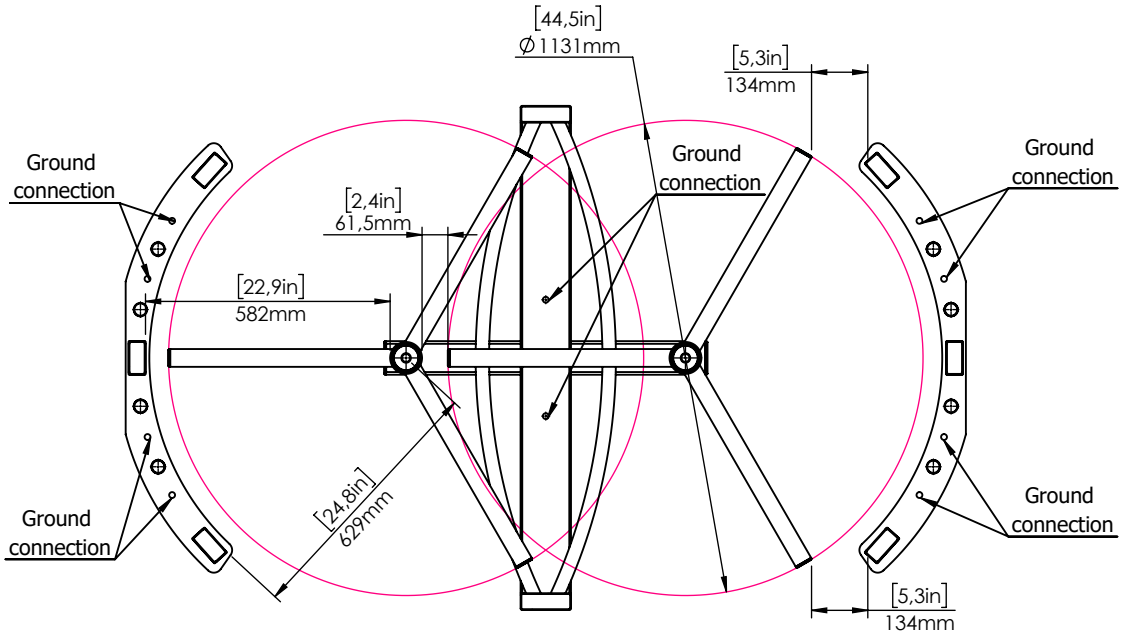

KESIT B-B
ÖLÇEK 1 : 18